YEAR 1991 ISSUE # 33

VZ 200/300

HUNTER VALLEY VZ JOURNAL

DISK DRIVE AND DOS BASICS
DISK FILER PREVIEW
INVESTIGATING SOUND
EPROM BURNER UPDATE

PRODUCED BI-MONTHLY BY H.V.VZ.U.G.
A NON PROFIT ORGANIZATION

HELP - SELL & TELL PAGE 3

DISK DRIVE BASICS: PAGES 4-6

AS A LONG TIME DISK USER WITH SEVERAL COMPUTERS IT'S VERY EASY TO FORGET THAT THERE ARE MANY USERS WHO HAVE DIFFICULTY UNDERSTANDING THE BASICS JUST LIKE I DID WHEN I FIRST STARTED OUT AND I HOPE THIS ARTICLE WILL ANSWER SOME OF THEIR QUESTIONS.

DOS BASICS: PAGES 7-10

THE DOS IS ANOTHER AREA WHERE SOME OF OUR MEMBERS ARE HAVING DIFFICULTY. THIS ARTICLE DEALS MAINLY HOW DATA IS STORED ON DISK. COMING ISSUES WILL COVER PROGRAMMING AND DOS COMMUNICATION REGION.

DISK FILER PREVIEW: PAGE 10

ARE YOUR DISKS IN A MESS, FILES DUPLICATED, CAN'T FIND THE PROGRAM YOU WANT THEN DON'T DESPAIR AS YOUR SALVATION IS AT HAND. DAVE MITCHELL HAS JUST ABOUT FINISHED A DISK DIRECTORY DATABASE WHICH WILL SOLVE YOUR PROBLEM/S. FINAL VERSION MAY DIFFER TO THE PREVEIW COPY.

INVESTIGATING VZ SOUND PAGES 11-12
PART II BY BOB KITCH

THIS ARTICLE DIGS DEEPER IN THE STRUCTURE OF SOUND AS GENERATED BY THE VZ WHICH SHOULD MAKE IT EASIER FOR US NOVICES TO UNDERSTAND, MYSELF INCLUDED.

SOUND EFFECTS PROGRAM PAGES 12-14
BY BOB KITCH

STARWARS IN PREVIOUS ISSUE FEATURED THE SIMPLE SOUND COMMAND WHILE THIS PROGRAM CAN GENERATE A MUCH WIDER RANGE THAN PRVIOUSLY POSSIBLE ON THE VZ, WELL WORTH TYPING PROGRAM IN, ESPECIALLY IF YOU AN AUDIO OUTPUT ON YOUR VZ AND CONNECT IT TO AN AMPLIFIER OR MONITOR.

ETI 687 EPROM PROGRAMMER PAGES 15-17
BY HERMAN NACINOVICH

THE ORIGINAL PROGRAMMER COULD ONLY PROGRAM 8K AND 16K EPROMS ONLY. THE ADAPTOR BOARD SHOULD ALLOW PROGRAMMING OF 2K, 4K AND 32K EPROMS AS WELL. PLEASE NOTE IT IS ONLY A SUGGESTED CIRCUIT ONLY BUT IT WORKS AS I KNOW OF A PERSON WHO DID THE MODS.

VZ DISK FILER (CATALOGUER) PAGE 18
VZ MODEM SOFTWARE AND FAST
M/C DISASSEMLER SOFTWARE

SOFTWARE FOR SALE - PATCH3.3 PAGE 19
EXTENDED DOS & MENU-FILE COPIER

USER GROUPS ** NEWS ** SUBS PAGE 20

BELIEVE IT OR NOT:

A PERSON I KNOW CONTACTED ME WHO NOT LONG AGO AQUIRED A DISK DRIVE AND HAD A MAJOR PROBLEM AS HE COULDN'T GET IT TO READ ANY DISKS AFTER A WHILE. IT APPEARS THE PROGRAM HE WAS USING PROMPTED HIM/HER TO INSERT DIFFERENT DATA DISKS WHICH HE DULY DID BUT TO NO AVAIL. AFTER MUCH QUESTIONING IT WAS DISCOVERED THAT DISKS WERE NOT REMOVED FROM DRIVE AS THE PROGRAM DIDN'T PROMPT TO DO SO.

DISCLAIMER: EVERY EFFORT IS MADE TO INSURE THE ACCURACY OF INFORMATION CONTAINED WITHIN BE IT GENERAL, TECHNICAL, PROGRAMMING, ETC. NO RESPONSIBILITY CAN BE ACCEPTED BY HUNTER VALLEY VZ USERS' GROUP OR AUTHOR AS A RESULT OF APPLYING SUCH INFORMATION IN PRACTICE.

H.V.VZ USER GROUP FUTURE?

IT APPEARS THAT AROUND JUNE THIS YEAR THE H.V.VZ USER GROUP MAY HAVE TO CLOSE ITS DOORS MAINLY DUE TO DWINDLING LOCAL MEMBERSHIP WHO ATTEND MEETINGS AS QUITE OFTEN THE DOOR CHARGE DOES NOT COVER HALL HIRE AND ASSOCIATED COSTS. THE CLUB CANNOT AFFORD TO RUN AT A LOSS SO WE MAY END UP HAVING MEETINGS AT EACH OTHERS HOMES.

H.V.VZ JOURNAL FUTURE?

CONTRARY TO DWINDLING LOCAL MEMBERSHIP THE JOURNAL CIRCULATION IS INCREASING STEADILY AND ITS OPERATING FUNDS ARE QUITE HEALTHY. IN THE EVENT OF THE CLUB CLOSING THE JOURNAL WILL CONTINUE FOR AS LONG AS I'M ABLE TO DO SO. SUBSCRIBERS WILL NOT NOTICE ANY DIFFERENCE AS SINCE DECEMBER 1986 I'VE PRODUCED THE JOURNAL JUST ABOUT ON MY OWN ANYWAY AND SO IT WILL BE BUSINESS AS USUAL.

HELP WITH POKES & USER PORT:

SO FAR ONLY ABOUT 3 MEMBERS HAVE SUBMITTED SOME POKES AND ONLY ONE ON THE USER PORT, MY THANKS TO THEM. I NEED LOTS MORE REGARDLESS WHETHER IT'S ONE OR A DOZEN, EVERY POKE HELPS AND PLEASE REMEMBER WHAT MAY BE OBVIOUS TO YOU COULD BE NEW AND USEFUL TO SOMEONE ELSE. ED.

VZ BULLETIN BOARD: COMMENTS BY BEN HOBSON.

I HAD THOUGHT THAT ALL THE INTERESTED VZ MODEM USERS COULD GET TOGETHER AND PUT TEN TO TWENTY DOLLARS INTO A FUND TO SET UP A BULLETIN BOARD AT SOMEONE'S HOME. THE MONEY WOULD COVER INSTALLATION OF AN EXTRA PHONELINE, RENTAL AND OTHER COSTS. ONLY MEMBERS WHO PUT MONEY IN COULD USE THE BBS TO UP/DOWNLOAD SOFTWARE BUT VISTORS COULD BE ALLOWED. AFTER THE FIRST 12 MONTHS MEMBERSHIP COULD BE CHARGED AT A CERTAIN AMOUNT BASED ON LAST YEAR'S COSTS. IT'S WORTH A MENTION. WHO KNOWS, THERE MAY BE ENOUGH INTERESTED PEOPLE TO GET IT GOING.

RS232 PORT TESTING HINT:

DAVE MITCHELL NOT HAVING THE SOFTWARE FOUND ANOTHER WAY TO TEST THE RS232 PORT. HE SIMPLY USED A DIGITAL MULTIMETER AND GOT A READING OF ABOUT +/- 8 VOLTS. HE USED THE OUT COMMAND TO ACTIVATE THE PORT FOR TESTING. AN ANALOG MULTIMETER WOULD'NT BE SUITABLE AS IT COULD'NT SWING BELOW 0 VOLTS UNLESS YOU HAVE A CENTRE READING METER.

FUTURE ISSUES:

SOME OF THE PLANNED CONTENT WILL DEAL WITH THE DOS COMMANDS, INP & OUT FUNCTIONS AND PRINT USING TO NAME JUST A FEW. IT APPEARS QUITE A FEW MEMBERS HAVE PROBLEMS IN UNDERSTANDING HOW TO USE ABOVE IN THEIR PROGRAMS. ON THE OTHER HAND YOU MAY HAVE AN ARTICLE TO SUBMIT WHICH WOULD BE CONSIDERED FOR PUBLICATION.

COPYRIGHT - THE HUNTER VALLEY VZ JOURNAL IS SUBJECT TO COPYRIGHT AND NO MATERIAL IN THE JOURNAL MAY BE REPRODUCED IN PART OR WHOLE WITHOUT THE CONSENT OF THE HUNTER VALLEY USERS' GROUP OR THE AUTHOR WHO RETAINS COPYRIGHT.

DISK DRIVE BASICS BY JOE LEON

OVER THE YEARS THERE HAVE BEEN VERY FEW ARTICLES ON THE USE OF DISK DRIVES AND I'VE HAD QUITE A FEW REQUESTS FOR MORE INFORMATION. UNFORTUNATELY THE DOS MANUAL IS VERY SKIMPY ON THE SUBJECT. THIS SERIES OF ARTICLES IS INTENDED TO SUPPLEMENT THE DOS MANUAL.

I STRONGLY SUGGEST FOR THOSE INTERESTED TO GET THE VZ 300 TECHNICAL REFERENCE MANUAL AS IT HAS A FAIR BIT MORE INFORMATION ON THE DISK DRIVE AND DOS. AS THE TITLE SUGGESTS I'M STARTING WITH THE BASICS OF HARDWARE AND SOFTWARE AND IN DUE COURSE ALL DISK COMMANDS WILL BE COVERED.

REFERENCE MATERIAL FOR THE ARTICLE/S WAS OBTAINED FROM THE DOS AND VZ 300 TECHNICAL REFERENCE MANUALS, GERMAN DOS MANUAL AND KNOWLEDGE GAINED OVER THE YEARS FROM VARIOUS SOURCES AND PUBLICATIONS.

FLOPPY DISK: THE VZ DRIVE USES 5.25" FLOPPY DISKS AND WHEN FORMATTED WILL STORE A MAXIMUM OF 80K. FOR THOSE WHO DON'T KNOW WHAT A 'K' IS I'LL EXPLAIN SO NEXT TIME YOU READ OR HEAR ABOUT K'S OR MEGS YOU'LL KNOW WHAT IT'S ALL ABOUT. THE SMALLEST PIECE OF INFORMATION THE COMPUTER CAN HOLD IS 1 BIT.

4 BITS = 1 NIBBLE	2 NIBBLES= 1 BYTE	8 BITS = 1 BYTE
1,024 BYTES = 1K	80K = 81,920 BYTES	
1000K = 1M (MEG)	1M = 1,024,000 BYTES	

THE DIAGRAM OF THE DISK BELOW IS PRETTY WELL SELF EXPLANATORY, BUT SOME POINTS MAY NEED EXPLAINING.

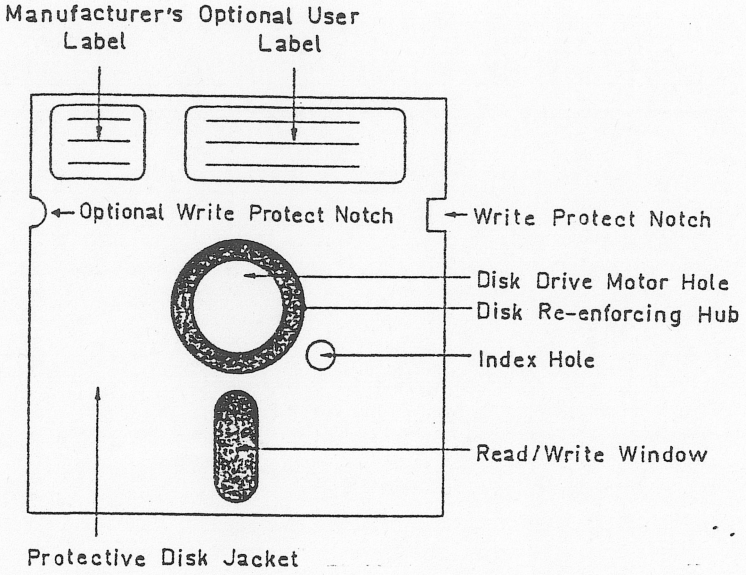

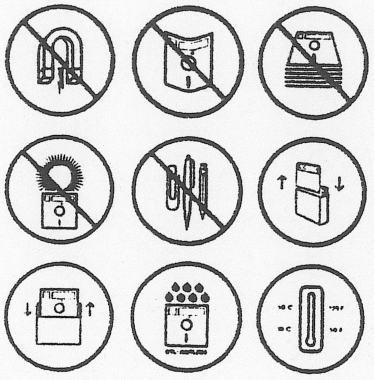

WRITE PROTECT NOTCH: BY COVERING THIS NOTCH WITH OPAQUE WRITE PROTECT LABELS SUPPLIED WITH THE DISKS YOU CAN MAKE SURE YOUR PROGRAMS OR VALUABLE DATA WON'T BE ACCIDENTALLY ERASED AND WHILE-EVER THE LABELS ARE THERE YOU CANNOT WRITE TO THE DISK. YOU'LD HAVE TO REMOVE THE LABELS FIRST TO DO SO.

OPTIONAL WRITE PROTECT NOTCH: AS THE VZ USES ONLY ONE SIDE FOR DATA STORAGE SO THE DISK CAPACITY CAN BE DOUBLED TO 160K BY UTILISING OTHER SIDE OF DISK BY CUTTING ANOTHER WRITE PROTECT NOTCH AN TURNING DISK OVER. SEE WRITE/READ HEAD DIAGRAM FOR BETTER UNDERSTANDING.

INDEX HOLE: THIS IS NORMALLY USED BY DRIVES AS A REFERENCE TO ALIGN THE WRITE/READ HEAD TO A PARTICULAR TRACK SO THE DOS KNOWS WHERE TO LOOK FOR ANY PARTICULAR TRACK AND IT'S NOT USED BY THE VZ DRIVE. A SIMPLE SCREW IS USED IN THE VZ DRIVE TO ALIGN THE WRITE/READ HEAD TO TRACK ZERO.

THE RATTLE YOU HEAR FROM THE DRIVE WHEN YOU POWER UP, RESET THE VZ OR CHANGE DRIVES COMES FROM THE DOS MOVING THE WRITE/READ HEAD ASSEMBLY AGAINST THE SCREW SEVERAL TIMES TILL IT STOPS AND TRACK ZERO WILL BE DIRECTLY OVER THE WRITE/READ HEAD. IT'S A SIMPLE METHOD AND IT WORKS QUITE WELL. THE ONLY DRAWBACK IS WITH TIME THE DRIVES TEND TO GET OUT OF ALIGNMENT AND HAVE TO BE RECALIBRATED.

WRITE/READ WINDOW: THIS CUTOUT ON THE BOTTOM OF THE DISK IS WHERE THE W/R HEAD ACTUALLY WRITES AND READS THE DATA YOU WANT TO STORE ON DISK OR LOAD INTO THE VZ.

DISK RE-ENFORCING HUB: WHEN BUYING DISKS MAKE SURE THEY HAVE ONE AS THE DISKS WITHOUT A HUB ARE QUITE SOFT AND TEND TO BE DAMAGED BY NOT SEATING PROPERLY IN THE DRIVE.

PROTECTIVE MAINTANANCE: I CANNOT STRESS THIS STRONGLY ENOUGH, YOU MUST TAKE GOOD CARE OF YOUR DISKS IF YOU WANT TO AVOID VALUABLE PROGRAM OR DATA LOSS. PUT YOUR DISKS BACK IN THEIR JACKETS AFTER USE AND STORE THEM UPRIGHT. DO NOT EAT, DRINK, TOUCH DISK SURFACE OR SMOKE NEAR DISKS AS EVEN VERY TINY SMOKE PARTICLES CAN CONTAMINATE A DISK. THE WARNINGS ON THE BACK OF MOST DISK JACKETS ARE THERE FOR YOUR PROTECTION.

WRITE/READ HEAD ASSEMBLY: THE DIAGRAMATIC VIEW OF THE W/R HEAD ASSEMBLY SHOWS ONLY PART OF IT. THE UPPER LEVER ARM IS CONNECTED VIA A HINGE TO THE BOTTOM HEAD TRACKING ARM. WHEN YOU OPEN THE DISK DRIVE DOOR IT LIFTS THE LEVER ARM UP SO THE DISK CAN BE INSERTED OR REMOVED. NEVER ATTEMPT TO INSERT OR REMOVE DISK BY FORCE AS YOU COULD DAMAGE THE FELT PRESSURE PAD AND THEY'RE ABOUT IMPOSSIBLE TO BUY. THE DISK SHOULD SLIDE IN AND OUT EASILY.

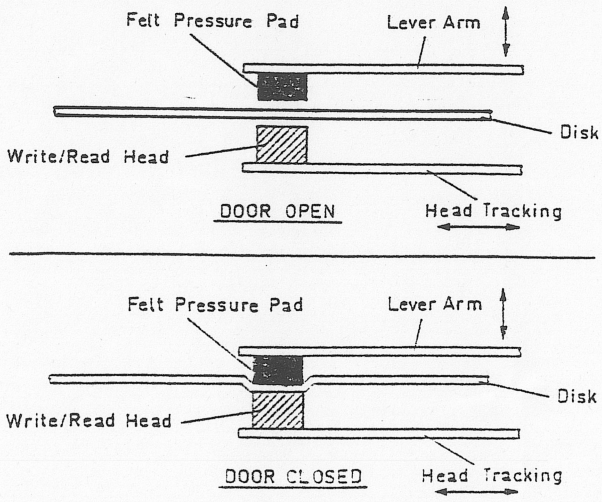

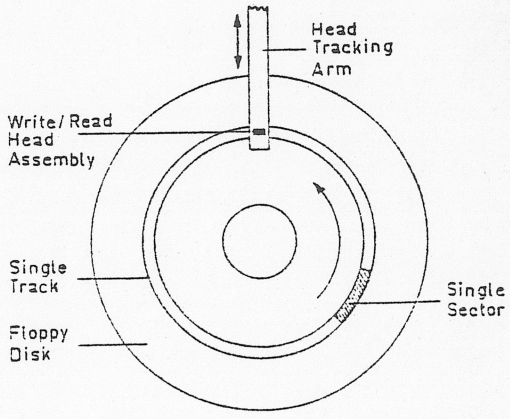

WHEN YOU CLOSE DRIVE DOOR THE FELT PAD UNDER THE LEVER ARM PUSHES THE DISK IN CONTACT WITH THE W/R HEAD. ANY CONTAMINATION ON DISK COULD RUIN WHOLE DISK WHEN IT STARTS SPINNING AROUND.

TO WRITE/READ A PARTICULAR TRACK/SECTOR THE W/R HEAD TRAVELS BACK AND FORTH WITHIN THE W/R WINDOW AND DRIVE MOTOR SPINS THE DISK SO THAT THE REQUIRED TRACK/SECTOR IS UNDER THE W/R HEAD.

AS MENTIONED BEFORE, BY REALISING THAT THE VZ DRIVE WRITES ONLY TO ONE SIDE OF THE DISK WE CAN USE OTHER SIDE TO DOUBLE DISK CAPACITY. YOU'LL ALSO NOTE THAT IT'S THE BOTTOM OF DISK THAT IS WRITTEN TO AND NOT THE TOP LIKE MOST PERSONS BELIEVE. THE TOP DIAGRAM SHOWS DISK DRIVE DOOR OPEN AND BOTTOM ONE WITH DOOR CLOSED.

DISK FORMATTING: BEFORE A FLOPPY DISK CAN BE USED IT MUST BE FORMATTED (INITIALIZED) USING THE INIT COMMAND SO THE DOS KNOWS WHERE TO STORE DATA OR GET IT FROM. THE DIAGRAM TO THE RIGHT OF THE W/R HEAD ASSEMBLY ON PREVIOUS PAGE SHOWS A FORMATTED DISK AND DIRECTION OF DISK ROTATION. ONLY A SINGLE TRACK AND SECTOR ARE SHOWN FOR CLARITY. THERE ARE ANOTHER 39 TRACKS JUST LIKE THE ONE SHOWN, ONE INSIDE THE OTHER LIKE ONION RINGS.

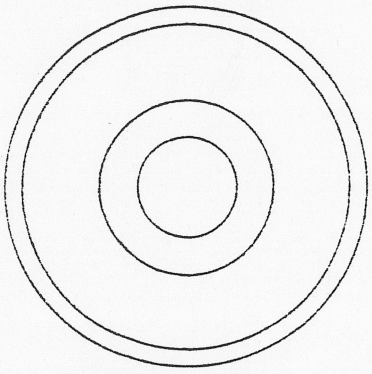

Unformatted Disk

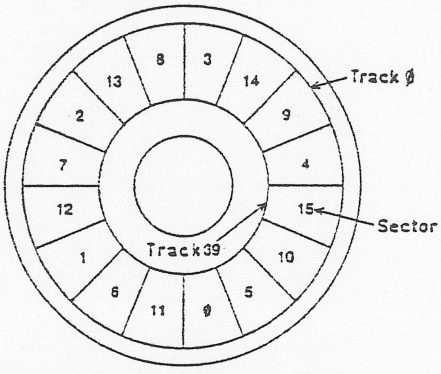

Standard Access 2 Sector Interleave

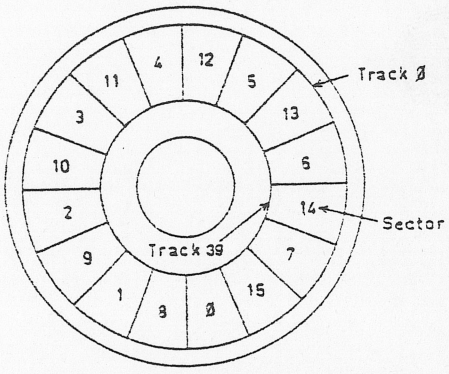

Faster Access 1 Sector Interleave

THE LEFT DIAGRAM SHOWS AN UNFORMATTED DISK AND WITHOUT FORMATTING IT IS JUST A BIT OF MYLAR PLASTIC AND OF NO USE TO ANY COMPUTER.

THE CENTRE DIAGRAM SHOWS A FORMATTED DISK USING THE NORMAL DOS COMMAND INIT AND USES STANDARD 2 SECTOR INTERLEAVE. THE DISK IS FORMATTED INTO 40 TRACKS (0-39) WITH EACH TRACK DIVIDED INTO 16 (0-15) SECTORS. EACH SECTOR HOLDS 128 BYTES AND EACH TRACK HOLDS 2K.

16 SECTORS X 128 BYTES = 2K (2048 BYTES) = 1 TRACK.
40 TRACKS X 2K = 80K = 1 DISK (1 SIDE).

TRACK 0, SECTOR 0-14 (1920 BYTES) IS RESERVED FOR THE DISK DIRECTORY. EACH SECTOR HOLDS INFORMATION ON 8 FILES. 15 SECTORS X 8 FILES = 120 FILES. TRACK 0, SECTOR 15 (128 BYTES) IS FOR THE TRACK MAP. 1920 BYTES + 128 BYTES = 2048 BYTES = 2K FOR DIRECTORY TRACK. TRACKS 1-39 (78K) IS FOR DATA STORAGE. 78K + 2K = 80K TOTAL.

THE RIGHT DIAGRAM SHOWS DISK FORMATTED USING FASTER ACCESS 1 SECTOR INTERLEAVE. WHAT THIS MEANS IS THAT MOST PROGRAMS WILL SAVE/LOAD UP TO 25% FASTER THAN 2 SECTOR INTERLEAVE FORMATTING. THIS TYPE OF FORMATTING CAN BE ACHIEVED USING THE COPY PROGRAM FROM TOOLKIT OR FASTDISK PROGRAM. IF WE LOOK AT THE STANDARD 2 SECTOR INTERLEAVE YOU'LL NOTE THAT IT WOULD TAKE NEARLY 3 REVOLUTIONS OF THE DISK TO READ TRACK 0 FOR EXAMPLE. IN THE 1 SECTOR INTERLEAVE IT WOULD TAKE JUST 2 REVOLUTIONS, A CONSIDERABLE SAVING IN ACCESS TIME.

①

```
B:MARK64    01 01 7AE9 7B55 006C
T:BASIC     01 02 7AE9 8F78 148F
B:OBJC      03 0C BB80 BFE3 0463
D:SYSOP     04 04 7AE9 7AF1 0008
B:BANK#1    04 05 C000 FFFF 3FFF
D:DT        04 06 7AE9 7AF1 0008
6 FILE(S)        54.750K FREE
```

②

```
B:MARK64    01 01 7AE9 7B55 006C
B:OBJC      03 0C BB80 BFE3 0463
D:SYSOP     04 04 7AE9 7AF1 0008
B:BANK#1    04 05 C000 FFFF 3FFF
D:DT        04 06 7AE9 7AF1 0008
5 FILE(S)        60.0K FREE
```

③

```
    00 423A4D41 524B3634 B:MARK64
    08 20200101 E97A557B   ....U.
    10 543A4241 53494320 T:BASIC
TRK18 20200102 E97A788F   ......
    20 423A4F42 4A432020 B:OBJC
00  28 2020030C 80BBE3BF   ......
    30 443A5359 534F5020 D:SYSOP
    38 20200404 E97AF17A   ......
    40 423A4241 4E4B2331 B:BANK#1
    48 20200405 00C0FFFF   ......
SCT50 443A4454 20202020 D:DT
    58 20200406 E97AF17A   ......
00  60 00000000 00000000 ........
    68 00000000 00000000 ........
    70 00000000 00000000 ........
    78 00000000 00000000 ........
```

④

```
    00 FFFFFFFF FFFFFFFF ........
    08 FFFFFFFF FFFFFFFF ........
    10 FFFFFFFF FFFFFF03 ........
TRK18 00000000 00000000 ........
    20 00000000 00000000 ........
00  28 00000000 00000000 ........
    30 00000000 00000000 ........
    38 00000000 00000000 ........
    40 00000000 00000000 ........
    48 00000000 00000000 ........
SCT50 00000000 00000000 ........
    58 00000000 00000000 ........
0F  60 00000000 00000000 ........
    68 00000000 00000000 ........
    70 00000000 00000000 ........
    78 00000000 00000000 ........
```

⑤

```
    00 423A4D41 524B3634 B:MARK64
    08 20200101 E97A557B   ....U.
    10 013A4241 53494320 .:BASIC
TRK18 20200102 E97A788F   ......
    20 423A4F42 4A432020 B:OBJC
00  28 2020030C 80BBE3BF   ......
    30 443A5359 534F5020 D:SYSOP
    38 20200404 E97AF17A   ......
    40 423A4241 4E4B2331 B:BANK#1
    48 20200405 00C0FFFF   ......
SCT50 443A4454 20202020 D:DT
    58 20200406 E97AF17A   ......
00  60 00000000 00000000 ........
    68 00000000 00000000 ........
    70 00000000 00000000 ........
    78 00000000 00000000 ........
```

⑥

```
    00 03000000 00F0FFFF ........
    08 FFFFFFFF FFFFFFFF ........
    10 FFFFFFFF FFFFFF03 ........
TRK18 00000000 00000000 ........
    20 00000000 00000000 ........
00  28 00000000 00000000 ........
    30 00000000 00000000 ........
    38 00000000 00000000 ........
    40 00000000 00000000 ........
    48 00000000 00000000 ........
SCT50 00000000 00000000 ........
    58 00000000 00000000 ........
0F  60 00000000 00000000 ........
    68 00000000 00000000 ........
    70 00000000 00000000 ........
    78 00000000 00000000 ........
```

⑦

```
    00 F87A0500 B1333037 .....307
    08 34342C31 3A840024 44,1:..$
    10 7B0A00B2 224C4F41 ...."LOA
TRK18 44494E47 20412F4C DING A/L
    20 20524F55 54494E45  ROUTINE
01  28 53202E2E 2E223A42 S ...":B
    30 4C4F4144 224F424A LOAD"OBJ
    38 4322002F 7B0B00B8 C"./....
    40 20313030 3000467B  1000.F.
    48 0C00544D D5343739 ..TM.479
SCT50 39393A53 5454D554 99:STT.T
    58 4DCD3137 00767B14 M.17....
02  60 00B13330 3836322C ..30862,
    68 535454CE D8285354 STT..(ST
    70 54D03235 3629CF32 T.256).2
    78 35363AB1 33300103 56:.30..
```

⑧

```
    00 3030003F 8F102781 00.?..'.
    08 5AD53330 303030BD Z.30000.
    10 33303035 303AB25A 30050:.Z
TRK18 3BE5285A 293BF728 ;.(Z);.(
    20 E5285A29 293A8700 .(Z)):..
03  28 618F7427 815AD534 ...'.Z.4
    30 39313532 BD343932 9152.492
    38 32353AB2 5A3BE528 25:.Z;.(
    40 5ACE3635 35333629 Z.65536)
    48 3B00768F 7E27B2F7 ;....'..
SCT50 28E5285A CE363535 (.(Z.655
    58 33362929 3A870000 36)):...
0B  60 00000000 00000000 ........
    68 00000000 00000000 ........
    70 00000000 00000000 ........
    78 00000000 00000000 ........
```

IN THIS ARTICLE WE'LL CONTINUE WITH THE DISK BY SHOWING HOW THE DIRECTORY TRACK IS UTILISED AND HOW DATA IS STORED AND HOW DOS KNOWS WHERE TO FIND IT. AS MENTIONED IN PREVIOUS ARTICLE TRACK 0 IS RESERVED FOR THE DIRECTORY WHILE TRACKS 1 TO 39 IS FOR DATA STORAGE. BY DATA I MEAN ANY FILE AT ALL THAT IS NORMALLY STORED ON DISK. WE'LL START WITH THE DIRECTORY OF A SAMPLE DISK ON PREVIOUS PAGE.

BLOCKS 1 & 2 ARE DISK DIRECTORIES PRODUCED BY DAVE MITCHELL'S EXTENDED DOS V1.3. BESIDES THE STANDARD FILETYPE AND FILENAME OF A DIRECTORY IT ALSO GIVES START TRACK/SECTOR NUMBER ON DISK, START/END ADDRESS OF PROGRAM IN MEMORY AND NUMBER OF BYTES OF PROGRAM. ALL NUMBERS ARE IN HEX EXCEPT FOR LAST LINE.

WE'LL LOOK NOW AT BLOCK 3, PART OF THE DIRECTORY TRACK, TRACK 0 SECTOR 0 TO BE PRECISE AND SEE HOW THE PROGRAM INFORMATION IS STORED. THE INFORMATION IS PRESENTED IN 5 COLUMNS AND 16 LINES. EACH DIRECTORY ENTRY OCCUPIES 2 LINES AND SO A MAXIMUM 8 DIRECTORY ENTRIES ARE POSSIBLE PER EACH SECTOR, EG: 16 LINES PER SECTOR / 2 LINES PER ENTRY = 8 ENTRIES. WE'LL LOOK AT A PROGRAM CALLED MARK64 AS AN EXAMPLE.

COLUMN 1/LINE 00:	TRK 00 & SCT 00 DENOTES TRACK 00H AND SECTOR 00H.
COLUMN 2:	00 TO 78 DENOTES FIRST BYTE IN LINES 00 TO 78 IN COLUMN 3. EACH BYTE CONSISTS OF 2 DIGITS IN HEX.
COLUMN 3/LINE 00:	FILETYPE (1 BYTE), DELIMITOR (1 BYTE), FILENAME (2 BYTES)
COLUMN 4/LINE 00:	FILENAME CONTINUED (4 BYTES)
COLUMN 5/LINE 00:	ASCII EQUIVALANT OF COLUMN 3 AND 4, LINE 00.
COLUMN 3/LINE 08:	FILENAME CONTINUED (2 BYTES), START TRACK NUMBER (1 BYTE), START SECTOR NUMBER (1 BYTE).
COLUMN 4/LINE 08:	START ADDRESS, LO/HI BYTE (2 BYTES), END ADDRESS LO/HI BYTE (2 BYTES).
COLUMN 5/LINE 08:	ASCII EQUIVALANT OF COLUMN 3 AND 4, LINE 08.

LINE #	COLUMN 3	COLUMN 4
00	42 3A 4D 41	52 4B 36 34
	B : M A	R K 6 4

LINE #	COLUMN 3	COLUMN 4
08	20 20 01 01	E9 7A 55 7B
	TK SC	LO/HI LO/HI

THE LAST 4 LINES IN BLOCK 3 CONTAIN 0'S WHICH MEANS NO MORE DIRECTORY ENTRIES ARE TO BE FOUND IN TRACK 0. ONLY 6 DIRECTORY ENTRIES ARE ON THIS PARTICULAR DISK, EG: 12 LINES / 2 = 6 ENTRIES. BLOCK 4 IS THE TRACK MAP FOR THIS PARTICULAR DISK.

WHEN YOU TYPE IN STATUS AND PRESS RETURN THE DOS READS TRACK 0, SECTOR 0FH (TRACK MAP) AND INFORMS YOU OF DISK STATUS, EG:

438 RECORDS FREE
54.750K BYTES FREE

THE TERM RECORDS IS A BIT OF A MISNOMER, IT SHOULD BE SECTORS INSTEAD WHICH IS A MORE ACCURATE DESCRIPTION.

NOTE: FOR A MORE DETAILED EXPLANATION OF THE TRACK MAP REFER TO P. HICKMAN'S ARTICLE, 'TRACK MAP EXPLAINED' IN ISSUE # 30, PAGES 8-9.

BLOCK 5 IS SIMILIAR TO BLOCK 3, BUT WITH ONE IMPORTANT DIFFERENCE. I'VE ERASED A FILE CALLED T:BASIC USING THE ERA COMMAND. IF YOU COMPARE LINE 10 IN BLOCKS 3 & 5 YOU'LL NOTE IN BLOCK 5, LINE 10, 01 REPLACES 54 WHICH IS THE FILETYPE DESIGNATION. YOU'LL ALSO NOTE THAT ALL OTHER INFORMATION REMAINS INTACT INCLUDING THE PROGRAM ITSELF.

IF WE WERE TO TYPE IN STATUS AN PRESSED RETURN WE'LD GET:

480 RECORDS FREE
60.0K BYTES FREE

BLOCK 2 IS SIMILIAR TO BLOCK 1 EXCEPT IT HAS ONE FILE LESS, THE FILE I ERASED SO YOU COULD SEE THE EFFECT AN ERASURE HAS ON THE DISK DIRECTORY AND TRACK MAP.

IF YOU WERE TO SAVE ANOTHER FILE TO THIS DISK THEN THE 01 IN LINE 10 WOULD INFORM THE DOS THAT LINES 10 & 18 ARE AVAILABLE FOR A DIRECTORY ENTRY AND THE TRACK MAP IN BLOCK 6 WOULD INFORM THAT TRACK 01, SECTOR 02 TO TRACK 3, SECTOR 8 IS AVAILABLE FOR DATA STORAGE AND ANY INFORMATION CONTAINED IN THAT AREA WOULD BE OVER-WRITTEN.

IF YOU COMPARE BLOCK 4 & 6 YOU'LL NOTICE THE EFFECT AN ERASURE HAS ON THE TRACK MAP. FROM THE ABOVE INFORMATION IT BECOMES OBVIOUS THAT IT'S POSSIBLE TO UNERASE AN ERASED FILE SIMPLY BY REPLACING THE 01 WITH A VALID FILETYPE. YOU'LL NEED ONE OF TWO PROGRAMS TO UNERASE AN ERASED FILE, EG:

'XB' BY RUSSELL HARRISON OR 'DISK DOCTOR' FROM 'TOOLKIT'.

TO UNERASE A FILE YOU'LD HAVE TO DO IT BEFORE ANY OTHER FILE IS WRITTEN TO DISK. WE'LL LOOK NOW AT HOW A PROGRAM IS STORED ON DISK AND HOW DOS KNOWS WHERE TO FIND EACH PART.

IF WE LOOK AT LINE 08 IN BLOCK 3 YOU'LL NOTE THAT B:MARK64 STARTS AT TRACK 01, SECTOR 02 AND BLOCK 7 IS THAT PARTICULAR TRACK/SECTOR. AS MENTIONED BEFORE EACH SECTOR CAN HOLD UP TO 128 BYTES, BUT IN TRACKS 1 TO 39 ONLY 126 BYTES OF DATA IS STORED PER SECTOR.

THE OTHER 2 BYTES ARE USED TO TELL THE DOS WHERE THE DATA STORAGE IS CONTINUED. THE 2 BYTE POINTERS ARE IN THE LINE 78, COLUMN 4, LAST 2 BYTES, EG:

01 = NEXT TRACK NUMBER.
03 = NEXT SECTOR NUMBER.

IT IS ALWAYS THE LAST TWO BYTES IN COLUMN 4, LINE 78 THAT TELLS US IF AND WHERE THE PROGRAM CONTINUES. BLOCK 8, LINE 78, COLUMN 4 LAST 2 BYTES CONTAIN 0'S WHICH MEANS WE HAVE ARRIVED AT PROGRAM END.

WHEN YOU START SAVING PROGRAMS OR DATA TO A DISK THEY ARE SAVED IN SEQUENTIAL ORDER, EG: TRACK 01, SECTOR 00 IS USED FIRST THEN TRK 01, SCT 01 TO SCT 0F AND THEN IT GOES TO TRK 02, SCT 00 AND SO ON TILL ALL DATA IS STORED. THIS IS NOT ALLWAYS THE CASE.

WHEN A PROGRAM OR DATA FILE BECOMES TOO BIG FOR THE ORIGINAL AREA DESIGNATED TO IT OR IT DROPS INTO A HOLE LEFT BY AN ERASED FILE THEN THE NEXT TRK/SCT # CAN JUMP TO ANY TRK/SCT # ACCORDING TO AVAILBLE DISK SPACE. IN PRACTICE PARTS OF A FILE CAN BE SPREAD OVER MANY NON SEQUENTIAL TRACKS AND SECTORS.

BEFORE ENDING THIS ARTICLE I'LD LIKE TO POINT OUT AN ERROR IN VZ 300 TECH. REF. MANUAL PAGE 32 UNDER THE HEADING OF 'DISK STRUCTURE'. THE NUMBER OF TOTAL DIRECTORY ENTRIES IS WRONG. 15 SECTORS (00-0F) X 8 DIRECTORY ENTRIES = 120 ENTRIES TOTAL, NOT 112 AS STATED. ALSO ORDER OF FILE INFORMATION IS WRONG AND CORRECT ORDER IS SHOWN BELOW.

```
FILE TYPE       - 1 BYTE  - T)EXT, B)INARY, D)ATA, ETC.
DELIMITOR       - 1 BYTE  - (3AH - COLON).
FILENAME (MAX)  - 8 BYTES - WORDPROC, DATA 1, ETC.
START TRACK #   - 1 BYTE  - TRACK 01H, 13H, 27H, ETC.
START SECTOR #  - 1 BYTE  - SECTOR 00H, 0AH, 0FH, ETC.
START ADDRESS   - 2 BYTES - E9H, 7AH = 31465D, ETC.
END ADDRESS     - 2 BYTES - 8FH, 78H = 36728D, ETC.
```

I HOPE THIS AND THE PREVIOUS ARTICLE HAS HELPED YOU UNDERSTAND BETTER HOW THE DISK IS ARRANGED AND UTILISED FOR DATA STORAGE.

DISK FILER PREVIEW BY JOE LEON

DAVE MITCHELL HAS BEEN BUSY AGAIN, THIS TIME WITH A DISK CATALOGING PROGRAM AND IF THE FINAL VERSION IS AS GOOD AS THE PREVIEW COPY THEN VZ DISK DRIVE USERS WILL HAVE ANOTHER EXELLENT UTILITY AT THEIR DISPOSAL. DISK FILER IS A DATABASE FOR DISK DIRECTORIES.

IT WILL READ NEARLY ALL YOUR DISK DIRECTORIES, SORT THEM INTO ASCII ORDER, AND PRINT OUT FROM 2 TO 7 COLUMNS DEPENDING ON YOUR PRINTER CAPABILITIES. THE SCREEN DISPLAY AND PRINTOUTS WILL BE IN ONE OF TWO FORMATS, EG:

DIRA: (MODIFIED), EG: 2 TO 7 COLUMNS.

```
U01F B:MARK64   U01F T:BASIC    U01F B:OBJC
U01F D:SYSOP    U01F B:BANK#1   U01F D:DT
```

DIRB (MODIFIED), EG:

```
U01F B:MARK64   01 01 7AE9 7B55
U01F T:BASIC    01 02 7AE9 8F78
U01F B:OBJ      03 0C BB80 BFE3
U01F D:SYSOP    04 04 7AE9 7AF1
U01F B:BANK#1   04 05 C000 FFFF
U01F D:DT       04 06 7AE9 7AF1
```

AS YOU CAN SEE MODIFIED DIRB GIVES YOU MORE INFORMATION ON YOUR FILES AND WOULD BE USEFULL IF YOUR DIRECTORY GOT CLOBBERED AND USING TOOLKIT'S DISK DOCTOR IT WOULD ALLOW YOU TO RESSURECT YOUR DISK AND ITS PROGRAMS FROM THE SCRAP HEAP. THE FIRST COLUMN IN MODIFIED DIRA AND DIRB GIVES INFO ON DISK ITSELF, EG:

U01F - U = UTILITIES 01 = DISK NUMBER F = FRONT OF DISK

NOTE: FINAL VERSION MAY CONTAIN MORE OR LESS THAN DESCRIBED.
APPROXIMATE PRICE OF DISK FILER - $25-$30 - CHECK WITH DAVE.

FOR MORE INFORMATION CONTACT:

DAVE MITCHELL PHONE - (079) 278 519
24 ELPHINSTONE STREET
NORTH ROCKHAMPTON 4701

LET'S INVESTIGATE SOUND ON THE VZ PART II BY BOB KITCH

LAST TIME WE PRODUCED THE STAR WARS THEME USING A FEW SIMPLE BASIC COMMANDS. LET'S ANALYZE THIS ACTION A LITTLE FURTHER AND SEE WHAT INSIGHT THIS GIVES US. RECALL THAT THERE WERE A FEW SHORTCOMINGS OR LIMITATIONS IN USING THE SOUND COMMAND.

SOUND COMMAND:

QUITE A LOT HAPPENS IN THE BASIC INTERPETER WHEN THE SOUND COMMAND IS USED.

AS THE COMMAND INTERPETER IS SCANNING THROUGH A LINE IN THE BASIC PROGRAM STATEMENT TABLE, IT IS SEARCHING FOR THE SOUND TOKEN 9EH. UPON FINDING THIS TOKEN, IT TRANSFERS CONTROL TO THE VERB ACTION ROUTINE FOR THE SOUND COMMAND LOCATED AT 2BF5H TO 2C71H. PERHAPS YOU WOULD LIKE TO DISASSEMBLE THIS PORTION OF YOUR ROM AND DECODE IT? THIS SECTION OF CODE LOOKS FOR THE PITCH AND DURATION VALUES IN THE PROGRAM STATEMENT TABLE THAT FORM PART OF THE COMMAND.

REMEMBER THAT THESE VALUES MUST BE IN THE RANGE OF 1 TO 31 AND 0 TO 9 RESPECTIVELY. THE ROUTINE MENTIONED ABOVE, CHECKS THESE VALUES. WHERE DOES IT PICK UP THE CORRECT FREQUENCY AND DURATION TO PULSE THE SPEAKER?

TWO TABLES OF VALUES ARE EMBEDDED IN THE ROM. A FREQUENCY TABLE OCCURS FROM 02CFH TO 030CH. THESE ARE TWO-BYTE ENTRIES AND CORRESPOND TO THE NOTES A2 TO D#5. (31 NOTES AND 62 BYTES.) AT 0361H TO 037FH ANOTHER 31 BYTE TABLE EXISTS FOR THE 31 TONES. THESE VALUES CORRECT THE DURATION FOR THE FREQUENCY VALUE READ FROM THE LARGER TABLE.

THE VERB ACTION ROUTINE THEN CALLS A COUPLE MORE SUBROUTINES IN ROM TO SWITCH BITS 0 AND 5 IN THE OUTPUT LATCH AT 6800H. THESE ARE THE "LOW-LEVEL" ROUTINES THAT CONTROL THE PIEZO SPEAKER. WE ARE NOW VERY CLOSE TO THE HARDWARE OF THE VZ.

THE LOW-LEVEL CODE CONSISTS OF THREE SUBROUTINES COMMENCING AT 3450H TO 3483H IN ROM. PERHAPS SOME MORE DISASSEMBLY WOULD BE ILLUMINATING AT THIS POINT? THE MAIN ROUTINE IS AT 345CH TO 3468H. ON ENTRY, THE HL REGISTER CONTAINS THE FREQUENCY, AND THE BC REGISTER CONTAINS THE DURATION. THE ENTRY POINT FROM THE VERB ACTION ROUTINE IS AT 3469H TO 3483H WHERE THE "CYCLING" OF THE OUTPUT LATCH OCCURS TO ACHIEVE THE SOUND. A THIRD BEEP ROUTINE OCCURS FROM 3450H TO 345BH. THIS SECTION SETS THE HL REGISTER TO 160 AND THE BC REGISTER TO 6 TO PROVIDE A BEEP. THIS SOUND IS HEARD EVERY TIME A KEY IS PRESSED ON THE KEYBOARD - SO THIS ROUTINE IS CALLED QUITE OFTEN.

SOUND EFFECTS PROGRAM:

TO ILLUSTRATE SOME OF THESE IDEAS, THE ACCOMPANYING PROGRAM IS USEFUL. A SERIES OF SOUND EFFECTS ARE GENERATED BY MANIPULATING THE HL AND BC REGISTERS OF THE Z80 AND BY CALLING THE SOUND ROUTINE LOCATED AT 345CH IN ROM. NOTE THAT THIS IS A DISTINCTLY DIFFERENT WAY OF MAKING A NOISE COMPARED TO THE SOUND COMMAND IN BASIC. FURTHERMORE, NOTE THE VARIETY OF SOUNDS THAT CAN BE PRODUCED. THE SOUND EFFECTS PROGRAM IS MORE "INTERESTING" THAN THE PREVIOUS STAR WARS MELODY.

THE SOUND EFFECTS PROGRAM USES THE USR() STATEMENT TO CONNECT THE BASIC PROGRAM TO THE ROM CALLS. IT IS AN EXTREMELY USEFUL AND POWERFUL TECHNIQUE. HOW MANY OF YOU ARE FAMILIAR WITH IT? IT IS POORLY EXPLAINED IN THE VZ MANUALS. THE 12 BYTES OF MACHINE CODE ARE SET OUT IN LINES 130 TO 180.

THE PROGRAM IS ALSO SET OUT TO ILLUSTRATE THE "LOOPING" THAT OCCURS TO PLACE CERTAIN VALUES INTO THE HL AND BC REGISTERS. THIS FORM OF CODING CLARIFIES THE PROCEDURES.

NEXT TIME WE WILL DISCUSS DIRECTLY SWITCHING THE LATCH AT 6800H USING OUR OWN MACHINE CODE ROUTINE - NOT THE ONE'S IN ROM. NOTICE HOW WE ARE "GETTING CLOSER TO THE HARDWARE" AND OBTAINING MORE CONTROL OVER THE SOUND OUTPUT.

```
10 '*****************************************************************
20 '**        SOUND EFFECTS  LE VZ # 10   R.B.K  30/1/86          **
30 '**  ALTERED 26/8/90  RBK,ANDREW WILLOWS, KEN CLARKE (NZ)      **
40 '*****************************************************************
90 '*****POKE IN M/L ROUTINE*****
100 FOR T%=-28687 TO -28676     :'POKE INTO 8FF1H TO 8FFCH.
110     READ D%:POKE T%,D%
120 NEXT T%
121 PT%=-28685                  :'ADDR. FOR PITCH (L-REG)
122 DR%=-28682                  :'ADDR. FOR DURATION (C-REG)
130 DATA 229                    :'  PUSH HL
140 DATA 033,160,000            :'  LD HL,00A0    PITCH 160
150 DATA 001,003,000            :'  LD BC,0003    DURATION 3
160 DATA 205,092,052            :'  CALL 345C
170 DATA 225                    :'  POP HL
180 DATA 201                    :'  RET
190 POKE30862,241:POKE30863,143:'SET 788E/FH TO F1/8F FOR USR().
200 '*****MAIN MENU*****
210 CLS
220 PRINT:PRINT"          [illegible]":PRINT
230 PRINT"[illegible]";
240 PRINT"[illegible]";
250 PRINT"[illegible]";
260 PRINT"[illegible]";
270 PRINT"[illegible]";
280 PRINT"[illegible]";
290 PRINT"[illegible]";
320 PRINT@466,"      ";
330 PRINT@448,"ENTER OPTION #  ";:INPUT OP$
340 POKE DR%,3                  :'SET DURATION TO 3 ON ENTRY.
400 '*****BRANCH TO CHOICE*****
410 IF OP$="A",1100 ELSE IF OP$="B",1200
420 IF OP$="C",1300 ELSE IF OP$="D",1400
430 IF OP$="E",1500 ELSE IF OP$="F",1600
440 IF OP$="G",1700 ELSE IF OP$="H",1800
450 IF OP$="I",1900 ELSE IF OP$="J",2000
460 IF OP$="K",2100 ELSE IF OP$="L",2200
470 IF OP$="M",2300 ELSE IF OP$="N",210
510 GOTO320
1100 '*****DECAYING ZOOP*****
1110 CLS:PRINT@232,"DECAYING ZOOP"
1120 FOR T%=1 TO 255 STEP 4     :'LOWER PITCH - FIXED DURATION.
1130     POKE PT%,T%
1140     X=USR(0)
1150 NEXT T%
1160 GOTO 210
1200 '*****INCREASING ZOOP*****
1210 CLS:PRINT@232,"INCREASING ZOOP"
1220 FOR T%=255 TO 1 STEP -4    :'RAISE PITCH - FIXED DURATION.
1230     POKE PT%,T%
1240     X=USR(0)
1250 NEXT T%
1260 GOTO 210
```

```
1300 '*****RANDOM BEEPS*****
1310 CLS:PRINT@234,"RANDOM BEEPS"
1320 POKE DR%,10                    :'CONSTANT DURATION.
1330 FOR Y%=1 TO 50                 :'DO 50 REPETITIONS - VARY PITCH.
1340    T%=RND(254)+1
1350    POKE PT%,T%
1360    X=USR(0)
1370 NEXT Y%
1380 GOTO 210
1400 '*****WAVES*****
1410 CLS:PRINT@237,"WAVES"
1415 POKE DR%,1                     :'FIX DURATION.
1420 FOR Y%=1 TO 10                 :'DO 10 OSCILLATIONS.
1425    FOR T%=1 TO 10              :'LOWERING PITCH.
1430       POKE PT%,T%
1435       X=USR(0)
1440    NEXT T%
1445    FOR T%=30 TO 1 STEP -1      :'RAISING PITCH.
1450       POKE PT%,T%
1455       X=USR(0)
1460    NEXT T%
1465 NEXT Y%
1470 GOTO 210
1500 '*****INCREASING PHASOR*****
1510 CLS:PRINT@230,"INCREASING PHASOR"
1520 FOR Y%=20 TO 1 STEP -1         :'INCREASE STARTING PITCH.
1530    FOR T%=Y% TO 1 STEP -1      :'DECREASE NUMBER OF TONES.
1540       POKE PT%,T%
1550       X=USR(0)
1560    NEXT T%
1570 NEXT Y%
1580 GOTO 210
1600 '*****DECREASING PHASOR*****
1610 CLS:PRINT@230,"DECREASING PHASOR"
1620 FOR Y%=1 TO 20                 :'DECREASE STARTING PITCH.
1630    FOR T%=1 TO Y%              :'INCREASE NUMBER OF TONES.
1640       POKE PT%,T%
1650       X=USR(0)
1660    NEXT T%
1670 NEXT Y%
1680 GOTO 210
1700 '*****UFO LEAVING*****
1710 CLS:PRINT@233,"UFO LEAVING"
1720 T%=61                          :'SET PITCH.
1730 FOR D%=60 TO 1 STEP -1         :'DECREASE DURATION.
1740    POKE DR%,D%
1750    POKE PT%,T%
1760    T%=T%-1                     :'LOWER PITCH.
1770    X=USR(0)
1780 NEXT D%
1790 GOTO 210
1800 '*****UFO LANDING*****
1810 CLS:PRINT@233,"UFO LANDING"
1820 T%=1                           :'SET PITCH.
1830 FOR D%=1 TO 60                 :'INCREASE DURATION.
1840    POKE DR%,D%
1850    POKE PT%,T%
1860    T%=T%+1                     :'RAISE PITCH.
1870    X=USR(0)
1880 NEXT D%
1890 GOTO 210
1900 '*****BUZZER*****
1910 CLS:PRINT@236,"BUZZER"
1920 POKE DR%,3
```

```
1930 POKE PT%,60
1940 FOR Y%=1 TO 100              :'SOUND TONE 100 TIMES.
1950    X=USR(0)
1960    FOR D%=1 TO 5             :'SMALL DELAY.
1970    NEXT D%
1980 NEXT Y%
1990 GOTO 210
2000 '*****SHIP SIREN*****
2010 CLS:PRINT@234,"SHIP SIREN"
2015 POKE DR%,8                   :'FIX DURATION.
2020 FOR Y%=1 TO 10               :'DO 10 REPEATS.
2025    FOR T%=200 TO 80 STEP -8:'INCREASE TONE.
2030       POKE PT%,T%
2035       X=USR(0)
2040    NEXT T%
2045    FOR D%=1 TO 150           :'DELAY BETWEEN REPEATS.
2050    NEXT D%
2055 NEXT Y%
2060 GOTO 210
2100 '*****BURGLAR ALARM*****
2110 CLS:PRINT@233,"BURGLAR ALARM"
2120 POKE DR%,255                 :'FIX DURATION TO MAX.
2130 FOR Y%=1 TO 5                :'DO 5 CYCLES.
2140    POKE PT%,50               :'TONE HI.
2150    X=USR(0)
2160    POKE PT%,60               :'TONE LO.
2170    X=USR(0)
2180 NEXT Y%
2190 GOTO 210
2200 '*****POLICE SIREN*****
2210 CLS:PRINT@233,"POLICE SIREN"
2215 POKE DR%,9                   :'FIX DURATION.
2220 FOR Y%=1 TO 5                :'DO 5 REPEATS.
2225    FOR T%=200 TO 80 STEP -4
2230       POKE PT%,T%            :'FAST RISING PITCH.
2235       X=USR(0)
2240    NEXT T%
2245    FOR T%=80 TO 200
2250       POKE PT%,T%            :'SLOW FALLING PITCH.
2255       X=USR(0)
2260    NEXT T%
2265 NEXT Y%
2270 GOTO 210
2300 '*****TELEPHONE*****
2310 CLS:PRINT@234,"TELEPHONE"
2315 POKE DR%,15                  :'FIX DURATION.
2320 FOR Y%=1 TO 5                :'DO 5 REPEATS.
2325    FOR D%=1 TO 2             :'SOUND DOUBLE RING.
2330       FOR T%=1 TO 8          :'DO 8 WÁRBLES.
2335          POKE PT%,100        :'LO TONE.
2340          X=USR(0)
2345          POKE PT%,50         :'HI TONE.
2350          X=USR(0)
2355       NEXT T%
2360       FOR T%=1TO 50          :'PAUSE BETWEEN DOUBLE RINGS.
2365       NEXT T%
2370   NEXT D%
2375   FOR D%=1 TO 400            :'PAUSE BETWEEN REPEATS.
2380   NEXT D%
2385 NEXT Y%
2390 GOTO 210
10000 CLS:PRINT"ERASING SOUNDS":ERA"SOUNDS"
10010 PRINT"SAVING SOUNDS":SAVE"SOUNDS"
10020 END
```

ETI 1611 VZ300 EPROM PROGRAMMER 33/15
UPDATE BY HERMAN NACINOVICH

NOTES ON PROPOSED EPROM PROGRAMMER BOARD

It may be possible to use the adaptor board to program 27512 EPROMs as well as 2716 and 2732 types. Also, the design is for a single sided board so there is probably no reason why it could not be built on veroboard if anyone wishes to do so.

Looking at the artwork, you will see that it includes 2 sets of 28-pin IC pads which overlap each other. One set is intended for soldering a 28-pin or 24-pin ZIF socket. The other set is for soldering header pins to. The idea is to solder the pins to the under-side of the board so that they project downwardly from the board. In this way, they can plug directly into the programmer socket without the need for special connecting cables, etc.

There is provision on my suggested circuit for a 6-way DIP switch. Simply set the appropriate switch positions to suit the particular EPROM type that you want to program. Alternatively, you can hardwire the appropriate switch locations with links if you are interested only in one type of EPROM.

As far as I know, most 2716 and 2732 EPROMs use 25V for the programming voltage supply (Vpp). This is not true, incidently, for National Semiconductor CMOS types, which require 12.5V. To obtain 25V when needed, a DIP switch and a trimpot could be added to the main board. The trimpot might be fitted in series with R15 and the switch connected across the trimpot. I suggest a value of, say, 1/4 the value of R15 for the trimpot. If you happen to have a larger value on hand then by all means use it. However, in that case shunt the trimpot with a fixed resistor so that the maximum adjustable voltage does not significantly exceed 25V when the trimpot is fully turned up. With the switch closed, the trimpot will be shorted out, so that the programmer will give the normal 12.5V or 21V under software control. With the switch open, the trimpot may be adjusted for 25V. In this switch position, the adjustment for 12,5V will be affected, so it will be important to reset the switch when programming 12.5V EPROMs.

It should not be necessary to rewind the ferrite core transformer to obtain 25V unless the maximum output current is less than 30mA or so at this voltage. If rewinding does prove necessary, I suggest increasing the number of secondary turns by 25% to 50%.

Unfortunately, the hardware is only part of the modification which will be required. There will need to be some software modifications as well, partly because of the hardware setup (ie the adaptor board) and partly because of differences in the programming waveforms for different EPROMs. The enclosed diagrams show typical programming waveforms which have to be generated by the software. The waveforms given here have been adapted from the National Semiconductor handbook for their CMOS range of EPROMs. They are probably very similar to the waveforms recommended by other manufacturers but I am not making any guarantees. You should always check, wherever possible, with the data sheets put out by the manufacturers of the particular EPROMs that you want to program. One other important point is that optimum programming pulse widths and recommended programming algorithms may vary between different brands, possibly because of differences in the ways that they are fabricated. The critical factors are programming pulse widths, the number of pulses applied per address location and the pulse

voltages. The routines which apply the programming pulses must be written in machine code or assembly language, not in BASIC as otherwise the critical timings will be adversely affected.

All of the programming voltages, other than address and data signals, are generated by sending appropriate codes to port B of the Z80PIO on the programmer board. Referring to my articles in ETI, you will recall that a particular pin voltage is set high or low by setting a corresponding bit of the control code sent to port B either high or low. Working out the correct control codes is therefore simply a matter of deciding which bits go high or low to generate the required pin voltages.

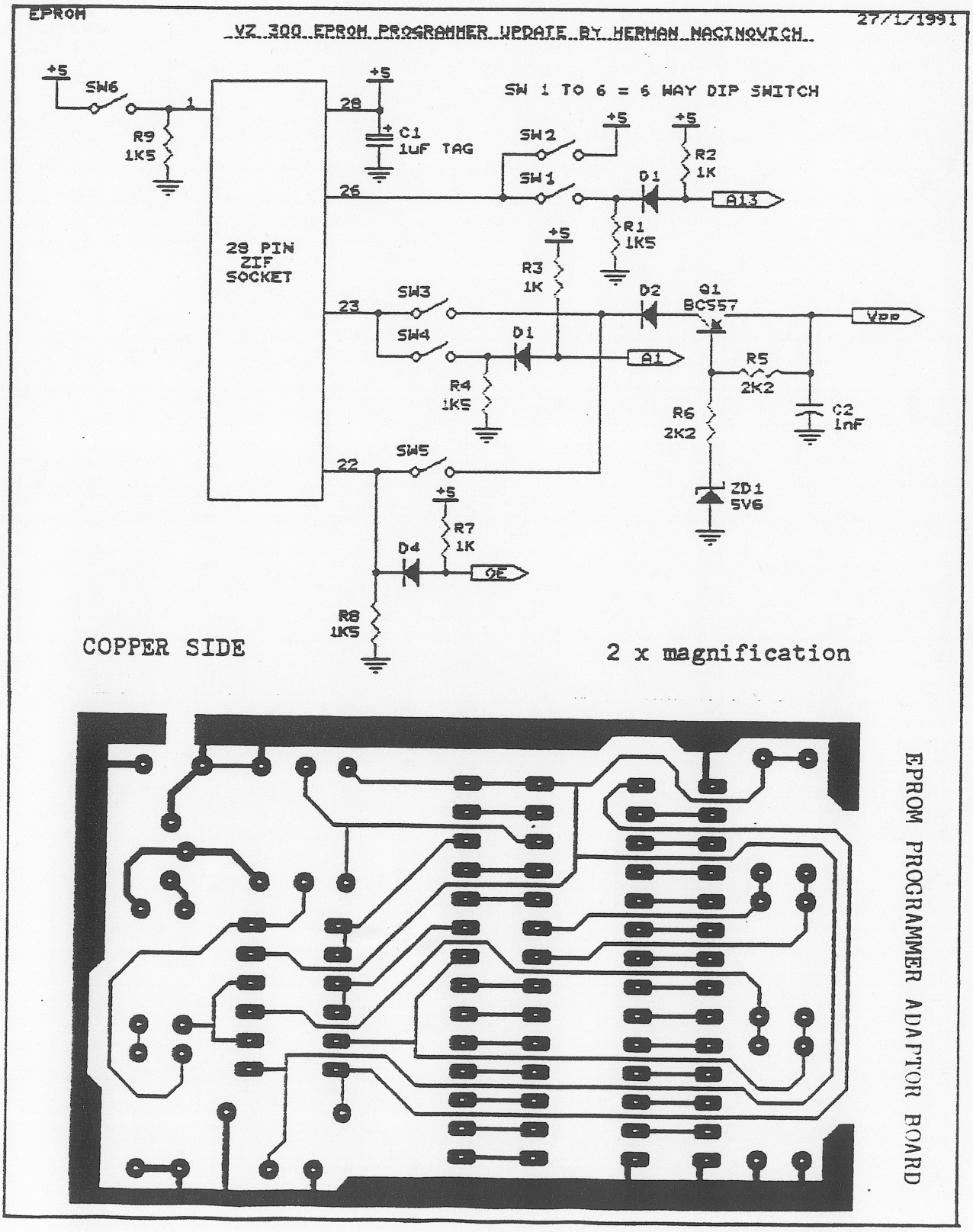

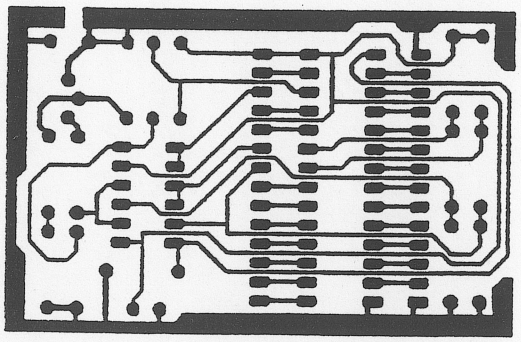

COPPER SIDE

1 x magnification

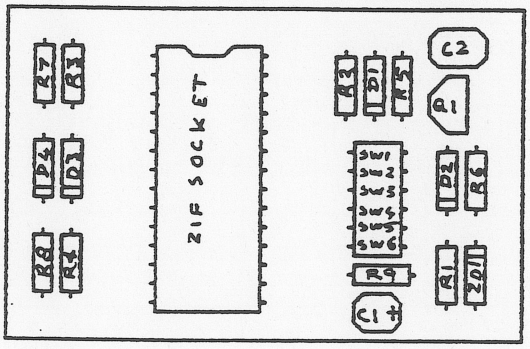

component overlay

1 x magnification

27512

1	A15	Vcc	28
2	A12	A14	27
3	A7	A13	26
4	A6	A8	25
5	A5	A9	24
6	A4	A11	23
7	A3	OE/Vpp	22
8	A2	A10	21
9	A1	CE	20
10	A0	D7	19
11	D0	D6	18
12	D1	D5	17
13	D2	D4	16
14	GND	D3	15

2716

1	A7	Vcc	24
2	A6	A8	23
3	A5	A9	22
4	A4	Vpp	21
5	A3	OE	20
6	A2	A10	19
7	A1	E/PROG	18
8	A0	D7	17
9	D0	D6	16
10	D1	D5	15
11	D2	D4	14
12	GND	D3	13

2732

1	A7	Vcc	24
2	A6	A8	23
3	A5	A9	22
4	A4	A11	21
5	A3	OE\Vpp	20
6	A2	A10	19
7	A1	CE	18
8	A0	D7	17
9	D0	D6	16
10	D1	D5	15
11	D2	D4	14
12	GND	D3	13

NOTE: PIN 1 : Vpp for 2764, 27128 and 27256
PIN 27 : PGM for 2764, 27128
PIN 27 : A14 for 27256

EDITOR'S COMMENT: HERMAN HAS PROVIDED ME WITH THE INFORMATION PRESENTED HERE TOGETHER WITH ABOUT ANOTHER 10 PAGES OF RELEVANT MATERIAL INCLUDING M/C AND BASIC PROGRAMS FOR COMPARING EPROMS AS WELL AS OPERATING DETAILS.

SOME WILL BE PRESENTED IN NEXT ISSUE/S WHILE OTHERS WILL BE MADE AVAILABLE TO THOSE PERSONS WHO ARE INTERESTED OR WHO CAN'T WAIT TILL NEXT ISSUE/S. JUST SEND A $2.00 STAMP TO COVER PHOTOSTATING AND POSTAGE AND I'LL FORWARD THE MATERIAL TO YOU.

VZ DISK FILER (CATALOGUER):

IF YOU HAVE TROUBLE FINDING SOME OF YOUR PROGRAMS THEN THIS NEW DISK CATALOGUEING UTILITY BY DAVE MITCHELL MIGHT BE JUST WHAT THE DISK DOCTOR ORDERED. DISK FILER IS A DATABASE THAT WILL READ, SORT & PRINT YOUR DISK DIRECTORIES. FINDING ANY FILE WILL BE AS EASY AS LOOKING AT AN INDEX. SEE PAGE 10 FOR A PREVIEW.

APPROX. PRICE: $25.00-$30.00

FOR MORE INFORMATION CONTACT:
DAVE MITCHELL 24 ELPHINSTONE STREET NORTH ROCKHAMPTON 4701
PHONE (079) 278 519

VZ DISASSEMBLER:

WHAT, ANOTHER DISASSEMBLER? BUT, YOU HAVE ALREADY GOT ONE? THIS ONE IS DIFFERENT!

THIS PROGRAM IS ENTIRELY WRITTEN IN MACHINE CODE. IT ACTUALLY RUNS ABOUT 40 TIMES FASTER THAN D.S.E.'S DISASSEMBLER (OR ANY ONE ELSE'S). IT WILL DISASSEMBLE ANY PROGRAM THAT YOU CAN BLOAD INTO MEMORY. IT WORKS WITH ANY VZ CONFIGURATION. IT DISASSEMBLES EVEN THE 88 EXTRA Z80 OPCODES THAT ZILOG DOESN'T ADMIT TO.

PRICE? ONLY $25.00: TAPE AND DISK VERIONS AVAILABLE.

PRICE INCLUDES HARDCOPY MANUAL. INTERESTED? YOU MAY PURCHASE THIS PROGRAM FROM PETER HICKMAN, FOR ADDRESS SEE BELOW.

VZ MODEM SOFTWARE:

DID YOU WANT TO TALK TO OTHER COMPUTERS VIA A MODEM? DID YOU BUY THE DSE TERMINAL EPROM, ONLY TO DISCOVER THAT IT ONLY WORKS WITH TAPE. IT ONLY ALLOWS YOU TO PRINT FILES, NOT SAVE THEM OR SEND THEM!

YOUR PROBLEMS ARE SOLVED! THE HICKMAN BROTHERS, PETER AND ANDREW, HAVE A BRAND NEW PROJECT WHICH WILL ALLOW YOU TO SEND, RECEIVE & SAVE FILES VIA A MODEM. IT WORKS WITH DISK!

SALE PRICE: $25.00 ONLY

INCLUDED ARE INSTRUCTIONS FOR THE HARDWARE MODIFICATIONS.

A SMALL MODIFICATION IS NEEDED TO YOUR DISK CONTROLLER. YOUR USER GROUP MAY HELP YOU MODIFY YOUR COMPUTER TO USE THIS EXCITING NEW SOFTWARE! IF YOU HAVE THE FUNCTION KEYS MOD AS WELL, THEN YOU WILL BE ABLE TO SEND EXTRA ASCII CHARACTERS SUCH AS:-

{ | } ~ _

THE MANUAL IS SUPPLIED ON DISK FOR YOU TO PRINT OUT WITH YOUR DISK VERSION OF E & F WORDPROCESSOR. IF YOU DO NOT OWN AN E & F WORDPROCESSOR PROGRAM, PLEASE ENCLOSE ANOTHER $5.00 (TOTAL $30.00) FOR PHOTOCOPYING AND POSTAGE OF THE MANUAL.

FOR PURCHASE OR INFORMATION CONTACT:
PETER HICKMAN P.O. BOX 8, WERRINGTON N.S.W. 2747.

FOR SALE E & F W.P.PATCH 3.3 33/19

PATCH 3.3 WRITTEN BY DAVE MITCHELL WILL CONVERT YOUR E & F TAPE WORD PROCESSOR FOR FULL DISK USE WHILE RETAINING ALL ORIGINAL FUNCTIONS. BELOW ARE ADDED DISK COMMANDS & FUNCTIONS :-

LOAD, SAVE, ERASE, RENAME, DIRECTORY, INITIALIZE, UPDATE, DRIVE 1 & 2, SOFTWARE SHIFTLOCK & IMBEDDED PRINTER CONTROL CODES PLUS CTRL+P WHICH BYPASSES PRINT MENU AND PRINTS TO SCREEN OR PRINTER. A ROUTINE IS ALSO PROVIDED TO CONVERT YOUR BASIC PROGRAM OR SOURCE CODE FILES INTO WORD PROCESSOR FILES.

PATCH 3.3 HAS PROVISION FOR FAST SAVING AND LOADING OF TEXT DATA TO AND FROM DISK USING BLOCK SAVE/LOAD TECHNIQUES. PRINTER CONTROL CODES CAN BE SAVED TO TAPE OR DISK ALONG WITH YOUR TEXT.

BSTWP.F - THIS UTILITY PROVIDED WITH PATCH 3.3 WILL CONVERT BASIC PROGRAMS AND ED/ASS. SOURCE CODE FILES INTO WORD PROCESSOR FILES.

SYSTEM REQUIREMENTS - VZ 300 + 16K RAM PACK - VZ 200 + 26K

PATCH 3.3 IS COPYRIGHT TO AND ONLY AVAILABLE FROM :-
HUNTER VALLEY VZ USERS' GROUP P.O.BOX 161 JESMOND 2299
N.S.W. AUSTRALIA - PHONE JOE LEON (049) 51 2756

PRICE - AUS/NZ AU$20.00 - UPDATE - AUS-$10.00 - NZ-AU$11.00.
UPDATING AVAILABLE ONLY TO PREVIOUS PURCHASERS OF PATCHES.

FOR MORE INFORMATION WRITE TO H.V.VZ.U.G. ENCLOSING A SSAE.

EXTENDED DOS V1.3 — $15.00

UPDATED VERSION WITH EXTRA COMMANDS ADDED :-

OLD COMMANDS - MERGE, DIRA, LDIRA, DIRB, LDIRB, OLD, OLD., DEC, HEX, STATUSA AND LSTATUSA. STATUSA AND LSTATUSA ALSO WORKS WITH VERSION 1.0 DOS.

NEW COMMANDS :-

MENU - LOADS AND RUNS BINARY OR TEXT MENU PROGRAM FROM DISK.
CODE - SIMPLIFIES USING PRINTER CONTROL CODES DIRECTLY OR FROM WITHIN A PROGRAM.
LTAB - IS FOR SETTING OF LEFT MARGIN.
MOVE - MOVES BASIC FILE FROM DISK TO CHOSEN MEMORY ADDRESS.
UPD - ERASES OLD FILE AND SAVES WITH SAME FILE NAME.

MENU/FILE COPIER — $15.00

THIS UTILITY WILL READ YOUR DISK DIRECTORY AND PRESENT YOU WITH SEVERAL OPTIONS. USING THE CURSOR YOU CAN RUN/BRUN ANY PROGRAM OR SELECT FILE COPY, REN, ERASE, DRIVE 1 OR 2, ETC. BESIDES COPYING TEXT AND BINARY FILES ALL OTHER FILES CAN BE COPIED AS WELL EXEPT FOR DATA FILES.

FOR PURCHASE OR INFORMATION CONTACT DAVE MITCHELL - (079) 27 8519
24 ELPHINSTONE ST. NORTH ROCKHAMPTON QUEENSLAND 4701

FOR INFORMATION OR DEMONSTRATION IN NEWCASTLE AREA CONTACT :-
JOE LEON - (049) 51 2756 - 22 DRURY STREET WALLSEND NSW 2287

NOTE: ALL PRICES INCLUDE POSTAGE:

CONTRIBUTIONS TO THE JOURNAL:

IF YOU ARE THINKING OF CONTRIBUTING TO THE JOURNAL THE PREFERED FORMAT IS BASIC LISTINGS, WORD PROCESSOR OR SOURCE CODE FILES ON TAPE OR DISK. FILES FROM THE FOLLOWING WORD PROCESSORS CAN BE ACCEPTED :-

E & F TAPE OR DISK PATCH 3.1-3.3, WORDPRO CARTRIDGE, WORDPRO PATCH, MOST SOURCE CODE FILES AND ALL QUICKWRITE WORD PROCESSOR FILES.

** ** CLUB MEETINGS - ALL WELCOME ** **

FIRST FRIDAY OF MONTH - NO MEETING IN JANUARY 1991

VENUE - JESMOND NEIGHBOURHOOD CENTRE MORDUE PARADE JESMOND
(REAR STOCKLAND MALL - BIG W)

FEBRUARY 1 - BASIC - MACHINE CODE & ASSEMBLY CONTINUED . . .
LIGHT PEN DEMONSTRATION
FITTING VZ, DISK DRIVES, PRINTER, JOYSTICK, LIGHTPEN INTERFACES, ETC INTO IBM TYPE SYSTEM CASE

MARCH 1 - BASIC - MACHINE CODE & ASSEMBLY CONTINUED . . .
160K MEMORY EXPANSION IF READY

FUTURE DEMONSTRATIONS -

EPROM PROGRAMMER & ERASER, AUCTION NIGHT - USING THE VZ, RITTY, ETC. IF YOU HAVE ANY IDEAS FOR A DEMONSTRATION OR A SUBJECT THEN PLEASE LET YOUR COMMITTEE KNOW SO WE CAN ORGANIZE IT IF POSSIBLE.

CLUB COMMITTEE & SUBSCRIPTIONS -

PRESIDENT --------- ROSS WOODS --- (049) 71 2843
SECRETARY/EDITOR -- JOE LEON ----- (049) 51 2756
TREASURER --------- GARY BULLEY -- (049) 54 7561
COMMITTEE MEMBERS - COLIN BRIDGE - PETER JONES

SUBSCRIPTION TO - AUST. - 3 ISSUES $11.00 - 6 ISSUES $21.00
H.V.VZ.JOURNAL - N. Z. - 3 ISSUES $13.00 - 6 ISSUES $26.00

HUNTER VALLEY VZ USERS' GROUP - PO BOX 161 JESMOND 2299
NSW AUSTRALIA

NOTE: PRICES INCLUDE POST & PACKING

VZ USER GROUPS & PUBLICATIONS --

VZ DOWN UNDER - VZ MAGAZINE - 6 ISSUES - $18.00 PER ANUM
HARRY HUGGINS 12 THOMAS SREET MITCHAM VICTORIA 3132

WAVZ - WESTERN AUSTRALIA VZ USER GROUP
GRAEME BYWATER P O BOX 388 MORLEY W A 6062

BRISBANE VZ USERS WORKSHOP - C/O 63 TINGALPA ST. WYNUM WEST 4178
SOFTWARE FOR SALE - DISK MENU

SAPPHIRE PRODUCTIONS - VZ DISK MAGAZINE - $20.00 PER ANUM
CONTACT JASON OAKLEY PO BOX 600 TAREE NSW 2430

NOTE: WHEN WRITING TO ANY ABOVE OR H.V.VZ. USERS' GROUP FOR INFORMATION PLEASE ENCLOSE A S.S.A.E. OR NZ 2 INT. REPLY COUPONS.